SE12000B

Static Exciter

The Power-Tronics SE12000B Static Exciter is a self-contained, heavy-duty complete chassis Static Exciter. The SE12000B Static Exciter is designed for continuous operation up to 125vdc at 900adc!

The SE12000B is uniquely designed to fit in a compact footprint while being passively convection cooled for a long, maintenance-free service life. Because of its unique modular design, the SE12000B minimizes downtime should a repair ever be necessary! All serviceable parts are easily removable without the need to remove the chassis from the mounting cabinet or tray.

Over 30 years of field use and design refinement makes the SE12000B a time-proven design, utilizing high-reliability components, and a unique modular design to simplify repair. The SE12000B is designed to provide a lifetime of service and is specifically built to minimize failures and potential downtime!

The SE12000B is capable of parallel operation with other generators or with a utility buss. The VRMSE-B control module includes an internal 0-9VDC or 4-20mA interface module to allow a wide variety of VAR, PF, or other PLC controls to remotely control the unit. An optional motorized potentiometer allows remote operation by dry contact switching or older pulsed-DC control schemes

Specifications

Input Voltage (SE12000B/120):	100 - 139vac, 1ø (Dual Feed)
Input Voltage (SE12000B/240):	208 – 240vac, 1ø (Dual Feed)
Sensing Voltage:	100 - 120vac, 3ø, 50VA
Frequency:	50 or 60 Hz
Voltage Regulation:	+/- 1% From NL to FL
Output Voltage (SE12000B/120):	0-105vdc @ 120vac input
Output Voltage (SE12000B/240):	0-210vdc @ 240vac input
Maximum Continuous Output:	1200adc (2 x 600adc)
Minimum Field Resistance:	.07Ω (SE12000B/120) .14Ω (SE12000B/240)
Regulation Type:	Flat Response
Physical Size:	24 x 45 x 12 in.
Weight:	125 lb.
Voltage Regulator Module:	VRMSE-1PDF
Parallel Operation	Yes
Minimum Buildup Volts:	5vac at AC Power Input
Internal Protection:	Fuses, cartridge type
External Voltage Control:	Yes, 0-10vdc @ 4-20mA
Loss of Sensing Protection:	Yes, Passive

POWER-TRONICS™
Electrical Power Controls

Table of Contents

Introduction and Functional Description

Caution: Read This Installation Manual Carefully and Entirely!

Warning: Do not use digital equipment to read voltage, Hz, or amperage during this installation. Use only Analog sensing equipment! Failure to do so may result in damage to equipment or in personal injury!

ALWAYS perform all setup procedures off-line
ALWAYS wear eye protection
ALWAYS strip wire insulation properly or use insulated connectors
ALWAYS use analog metering equipment when setting up the regulator
ALWAYS ensure the static exciter receives ample airflow
ALWAYS use adequate fusing
NEVER hold the static exciter in your hand or lap when energized
NEVER install the static exciter in a place it can be exposed to the elements or moisture
NEVER mount the static exciter over a screw, bolt, rivet, seam, or other fastener
NEVER remove the regulator cover while the unit is in operation
NEVER insert a screwdriver or other object under the regulator cover
NEVER touch any exposed part of the SE12000B during operation ***(LIVE HEATSINKS)***
NEVER install a switch in the DC portion of the static exciter's wiring
NEVER USE A DIGITAL FREQUENCY METER (*It can give a false reading*!)

Functional Description

The SE12000B Static Exciter is the result of over 30 years of engineering efforts and offers high-demand features at a competitive price point. The SE12000B is a time and field-proven design and is engineered to greatly simplify setup while offering extreme reliability. When properly installed, the SE12000B Static Exciter is designed to provide a lifetime of service.

A Generator voltage regulator has several automated tasks it must perform in order to provide reliable, clean, and regulated electricity. It must build-up the generator, regulate the terminal voltage within its design specifications, and protect both itself and the generator should a fault situation arise.

The SE12000B Static Exciter is designed to replace older obsolete static exciters or rotating exciters with a minimum of connections and a minimum of required installation space. The SE12000B Static Exciter contains an internal flashing circuit for guaranteed buildup, internal filter for voltage sensing, internal field-replaceable 1200A fusing (2 x 600A), and internal DC field noise suppression. The SE12000B is also designed to be user-serviceable should a problem arise. Fuse or rectifier replacement in the field takes only minutes, thanks to the unique modular design of the SE12000B.

Due to its extreme simplicity, the SE12000B Static Exciter is uncommonly reliable and offers features and regulation accuracy usually only offered by much more complicated and often much more expensive static exciters.

Determining Correct Application Sizing

The SE12000B Static Exciter is designed for use with 100-139VAC or 208-240VAC input. It contains internal suppression for use with brush-type generator sets. Before installation, it is necessary to verify that the SE12000B is the correct product for your application.

To determine if the SE12000B is the correct product for your generator you need to know any two of the following 3 specifications from the rating plate of your generator:

1: Exciter Field Voltage (in DC Volts) [Generally given in full load Voltage on nameplates]
2: Exciter Field Resistance (in Ohms) **[See Note Below]**
3: Exciter Field Amperage (in DC Amps) [Generally given in full load Amps on nameplates]

Using the specifications obtained from your generator exciter, verify that your generator fits the specifications below:

- Exciter full load voltage is **63VDC or less**, and your exciter field resistance is **.07Ω** or greater. **Use SE12000B/120**
- Exciter full load voltage is **125VDC or less**, and your exciter field resistance is **.14Ω** or greater. **Use SE12000B/240**


WARNING: BRUSH AND SLIP RING CONNECTION PROBLEMS ARE THE #1 SOURCE OF VOLTAGE CONTROL PROBLEMS AND FAILURE OF STATIC EXCITERS!!! *DO NOT INSTALL THE SE12000B IF THE BRUSHES AND/OR SLIP RINGS ARE NOT IN EXCELLENT CONDITION!!!*

STOP AND CORRECT BRUSH AND SLIP RING CONNECTION PROBLEMS IF ANY OF THE FOLLOWING CONDITIONS ARE PRESENT:

- **GROOVES IN SLIP RINGS**
- **ROUGH SLIP RING APPEARANCE OR GHOSTING (CHATTERING)**
- **OIL CONTAMINATION ON BRUSHES OR SLIP RINGS**
- **DULL, ROUGH, STRIPED, PITTED, OR METALLIC APPEARANCE OF BRUSH FACES**
- **FIELD RESISTANCE MEASURED BETWEEN SLIP RING BRASS AND FIELD RESISTANCE MEASURED BETWEEN FIELD LEADS EXCEEDS 1-2% DIFFERENCE**

Note about Field Resistance:

- When measuring field resistance on a brushless generator, simply measure the resistance of the exciter field through your field leads with a multimeter.
- When measuring field resistance on a brush-type generator, measure the resistance through both the field leads as well as directly on the slip rings themselves. **The readings you obtain should ideally be the same, but *no more than 1% difference.*** If you show more than 1% difference in reading your generator has brush and ring contact problems and will need cleaning or maintenance before installing the SE12000B. **Failure to correct brush and ring contact problems will result in severe damage to the voltage regulator as well as possible PERMANENT damage to the slip rings themselves! NEVER use emery cloth, carborundum stones, "comm sticks", or Tuner cleaner to dress or clean slip rings**. They will make a bad problem much, much worse! Only use Garnet or Flint sandpaper and clean with a clean rag soaked with Acetone for best results!

If you do not have any of the specifications of your generator's exciter, or if you don't know where to start when trying to determine your exciter specs, please see the section below for instructions on measuring and calculating your exciter specifications.

- Measure your exciter field resistance using a multimeter on your field leads. Record this value. If you have a brush-type generator, also take a resistance reading on your slip rings: the value you obtain on the slip rings should be no more than 1% difference from the value you obtained through the field leads.

- Next, start and run the generator and apply 12V from a battery through your field leads and record the AC voltage produced by the generator. To determine your full load exciter field voltage, use the following formula:

$$E_{Exc.} = \frac{E_{Gen.Conf.}}{\left(\frac{E_{Gen.Output}}{E_{Battery}}\right)} * 2$$

Where $E_{Gen.Conf.}$ is your Generator's configured voltage (e.g.: 120, 208, 240, 480V, etc.), $E_{Gen.Output}$ is your recorded output voltage, and $E_{Battery}$ is your battery voltage (12V usually).

- Next, calculate your maximum exciter field amperage using your measured field resistance and your calculated exciter voltage using the following formula:

$$I = \frac{E}{R}$$

Where I is your maximum exciter field current, E is your calculated field voltage from the above formula, and R is your measured field resistance.

Using the values you just measured and calculated, see the specifications on the previous page to determine whether the SE12000B is the correct product for your application.

Common 12-Lead Generator Wiring Diagrams

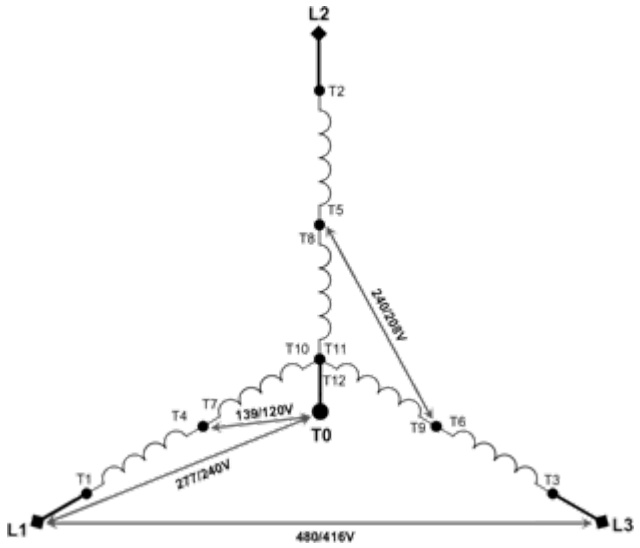

Series Wye (416/480V 3ø)

Voltage L-L: 416/480V
Voltage L-N: 240/277V
Voltage CT – N: 120/139V

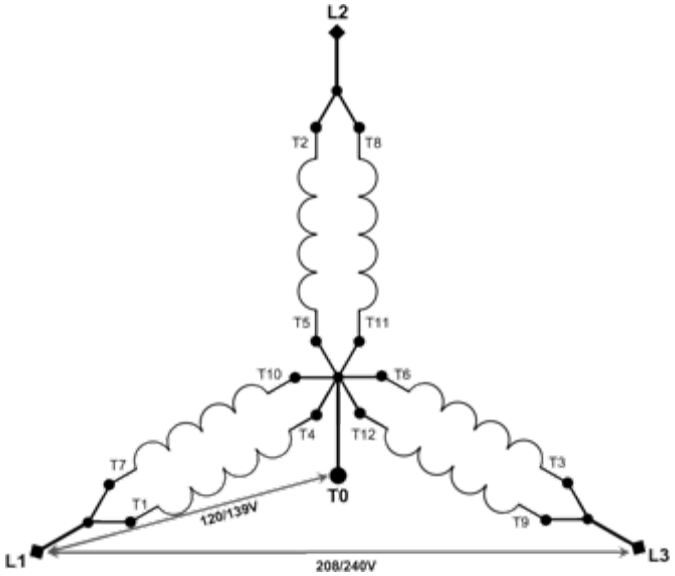

Parallel Wye (208/240V 3ø)

Voltage L-L: 208/240V
Voltage L-N: 120/139V
NOTE: 208V is Standard Voltage

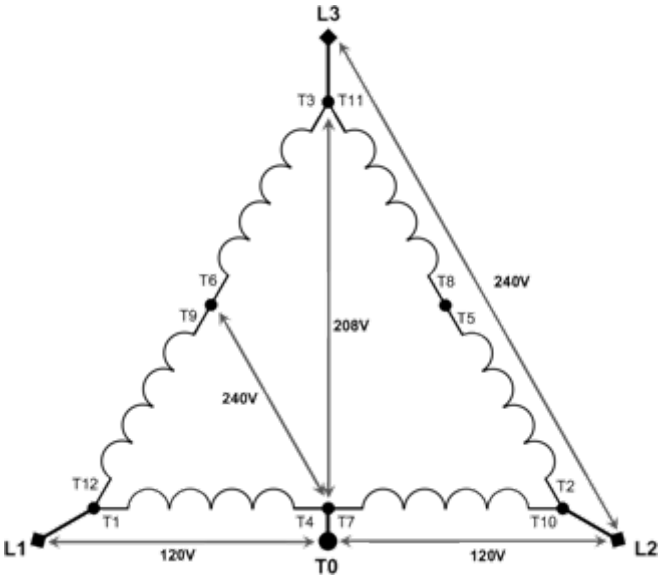

Series Delta (240V 3ø)

Voltage L-L: 240V
Voltage L1/L2-N: 120V
Voltage L3 – N: 208V
NOTE: L3-N is a "High Leg"
208V instead of 120V!

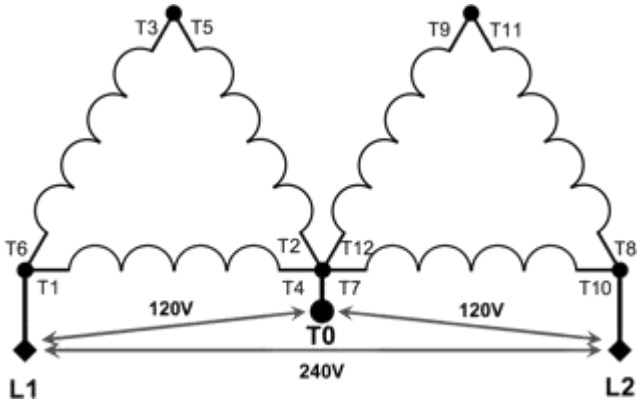

Double-Delta (120/240V 1ø)

Voltage L-L: 240V
Voltage L-N: 120V
Preferred Single-Phase Connection.
Don't Use Zig-Zag if Possible.
NOTE: Derate generator by 1/3 rated capacity when using this connection!

Mounting Dimensions

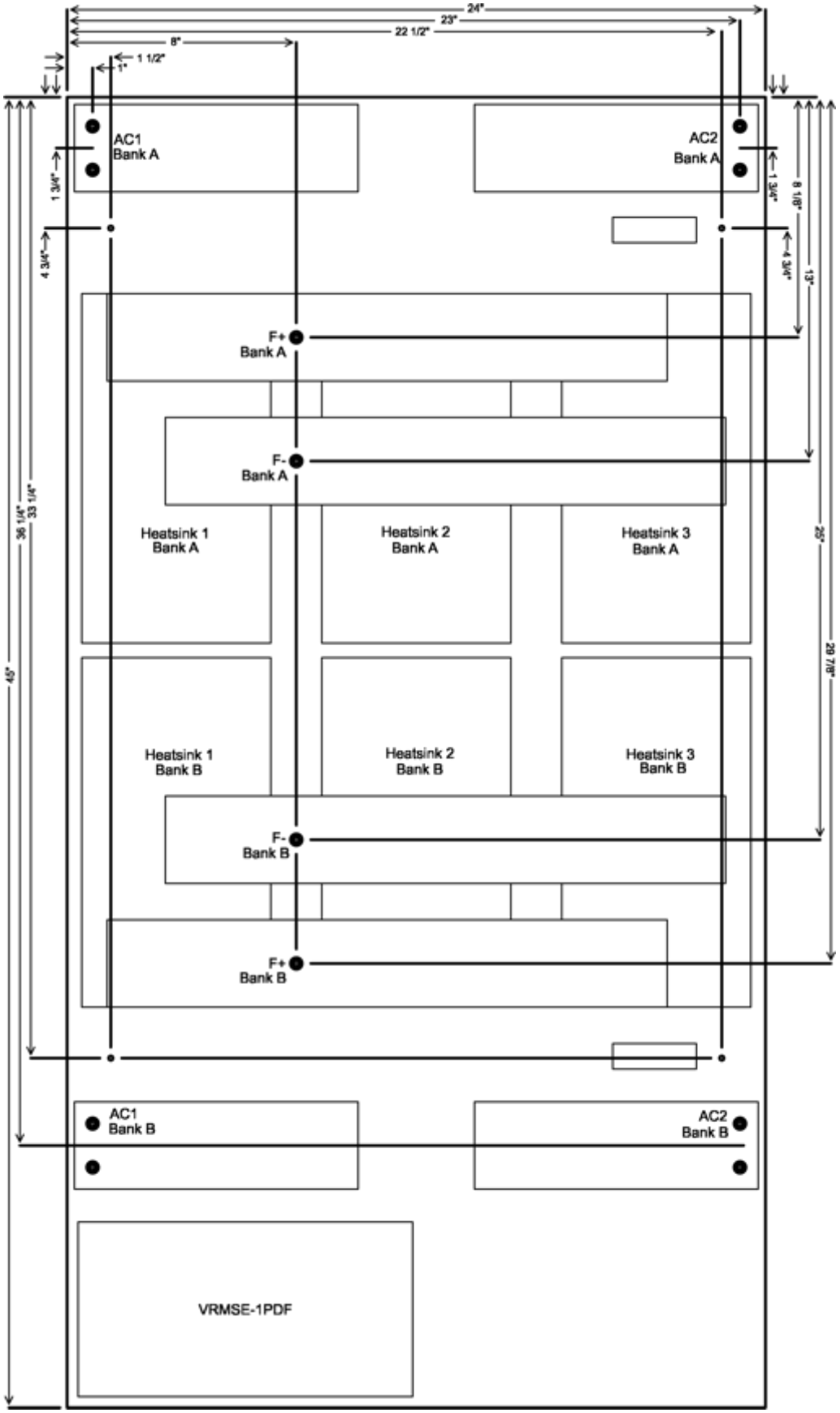

Shunt-Fed Input Power & Field Connection Diagram

(**See pages 11-15** for control wiring information)

The SE12000B is a Full-Wave rectified static exciter, which allows a maximum of 105/210VDC at 1200ADC with an input voltage of 120/240VAC 1ø.

This product is typically used on slip-ring generators with full load field voltages of 63/125VDC or less and full load exciter field amperages between 400 and 900ADC.

Note that the maximum input voltage to the SE12000B/120 Static Exciter is 139VAC 1ø and 240VAC for SE12000B/240! DO NOT input inappropriate voltage into the SE12000B Series! Severe damage to the unit will result!

NEVER install a switch or breaker on the DC or Exciter side of the voltage regulator!

Only install a switch or disconnect on the AC Side of the regulator!

Main Power Transformer Rating
190KVA @ 120VAC for SE12000B/120
380KVA @ 240VAC for SE12000B/240
Note Polarity Marks On Transformer!
ALL INPUTS TO THE SE12000B MUST COME FROM THE SAME TRANSFORMER!!!

Torque All Fuse Block Connections to 375 in•lbf (42 N•M)

Torque All Bus Bar Connections to 250 in•lbf (28 N•M)

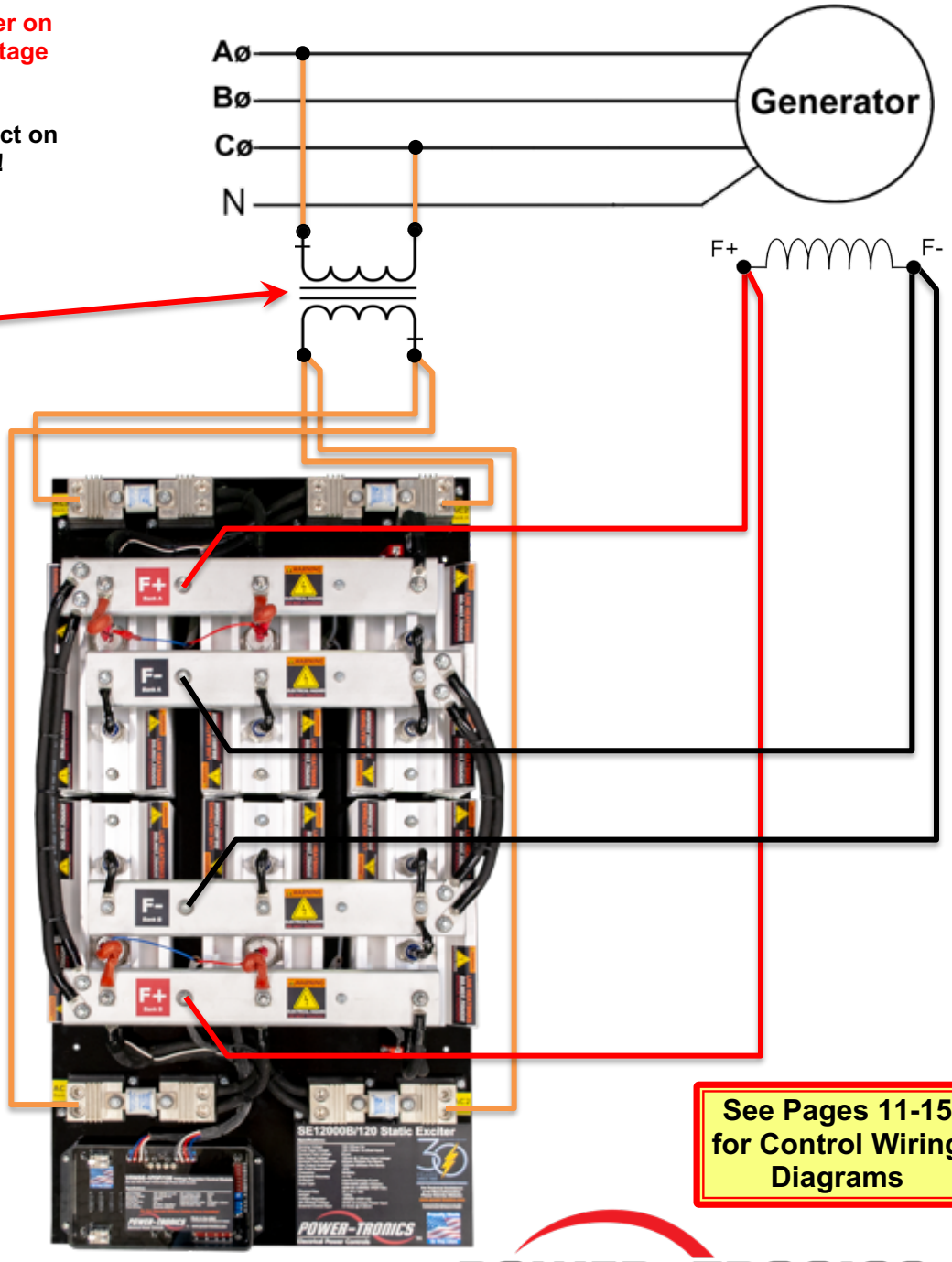

See Pages 11-15 for Control Wiring Diagrams

Line-Fed Input Power & Field Connection Diagram

(**See pages 11-15** for control wiring information)

The SE12000B may be Line-fed for its power supply, however for new installations we STRONGLY recommend using a Shunt-Fed power supply feed to retain black-start capability and ease paralleling synchronization.

Note that the maximum input voltage to the SE12000B/120 Static Exciter is 139VAC 1ø and 240VAC for SE12000B/240! DO NOT input inappropriate voltage into the SE12000B Series! Severe damage to the unit will result!

Main Power Transformer Rating
190KVA @ 120VAC for SE12000B/120
380KVA @ 240VAC for SE12000B/240
Note Polarity Marks On Transformer!
ALL INPUTS TO THE SE12000B MUST COME FROM THE SAME TRANSFORMER!!!

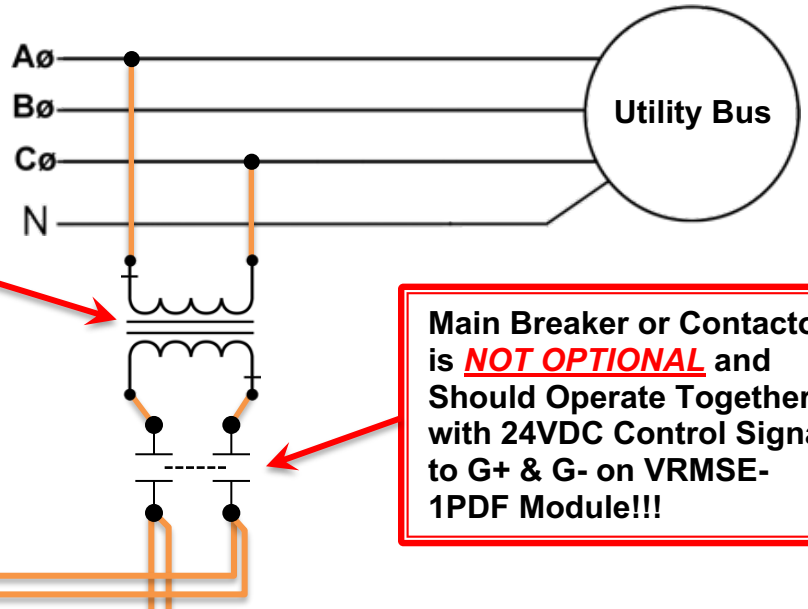

Main Breaker or Contactor is *NOT OPTIONAL* and Should Operate Together with 24VDC Control Signal to G+ & G- on VRMSE-1PDF Module!!!

Torque All Fuse Block Connections to 375 in•lbf (42 N•M)

Torque All Bus Bar Connections to 250 in•lbf (28 N•M)

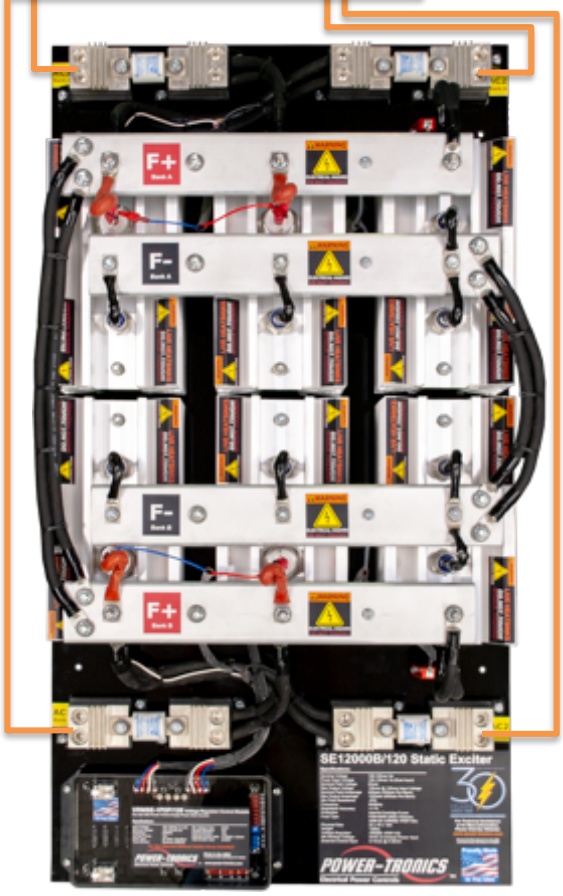

NEVER install a switch or breaker on the DC or Exciter side of the voltage regulator!

Only install a switch or disconnect on the AC Side of the regulator!

See Page 8 for Field Wiring Diagram

See Pages 11-15 for Control Wiring Diagrams

Creating an External Flashing Circuit

The SE12000B Series Static Exciters are designed primarily for industrial or commercial installations, such as hydroelectric dams or power stations where a station battery or existing power source is normally present. The SE12000B Series contain an internal residual voltage flashing circuit, or use an external flashing source to bring the generator up to voltage during startup.

The diagram below shows how to create a safe flashing circuit to prevent damage to the SE12000B or the power source during the flashing procedure.

A typical flashing power-source is a 125vdc station battery. Contactor, diode, and resistor should be sized to fit the power source being used. Please contact Power-Tronics for sizing assistance.

To avoid damage to the SE12000B Static Exciter or possible damage to the flashing power source, the flashing source should be completely disconnected from the SE12000B and the generator field once the flashing sequence is complete!

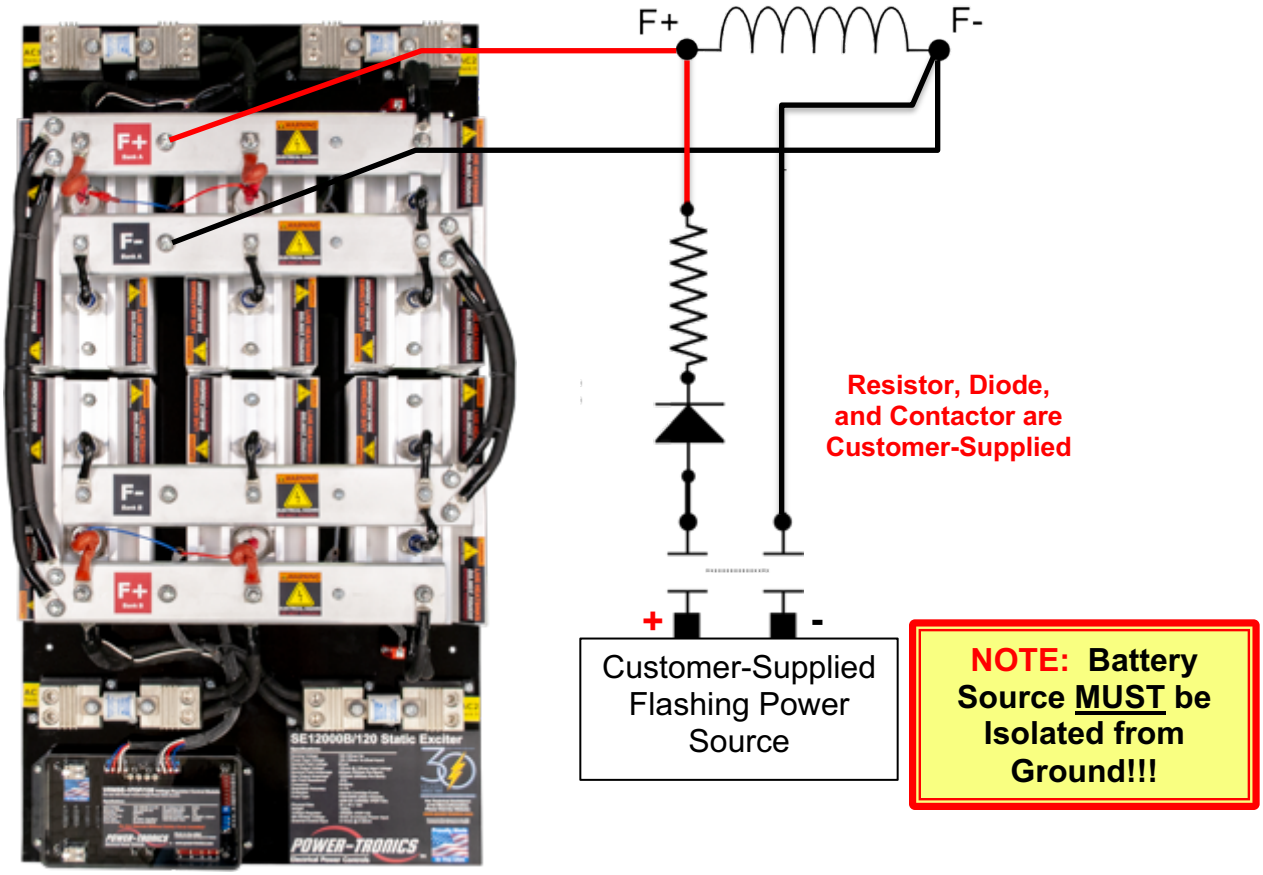

VRMSE-1PDF Control Module

The VRMSE-1PDF Control Module is an integrated device designed to replace multiple discrete components in previous generations of Static Exciters. It incorporates an Automatic Voltage Regulator, AC Filtering, Automatic Residual AC Flashing Circuit, Firing circuitry, and integrated 0-10VDC / 4-20mA Interface Module.

The unitary design simplifies installation in the field, and greatly simplifies replacement if a fault occurs with the control module. The unit has 8 color-coded wires with quick-connect terminals, and can be quickly swapped out in under 5 minutes without the need to remove the chassis from its enclosure or tray.

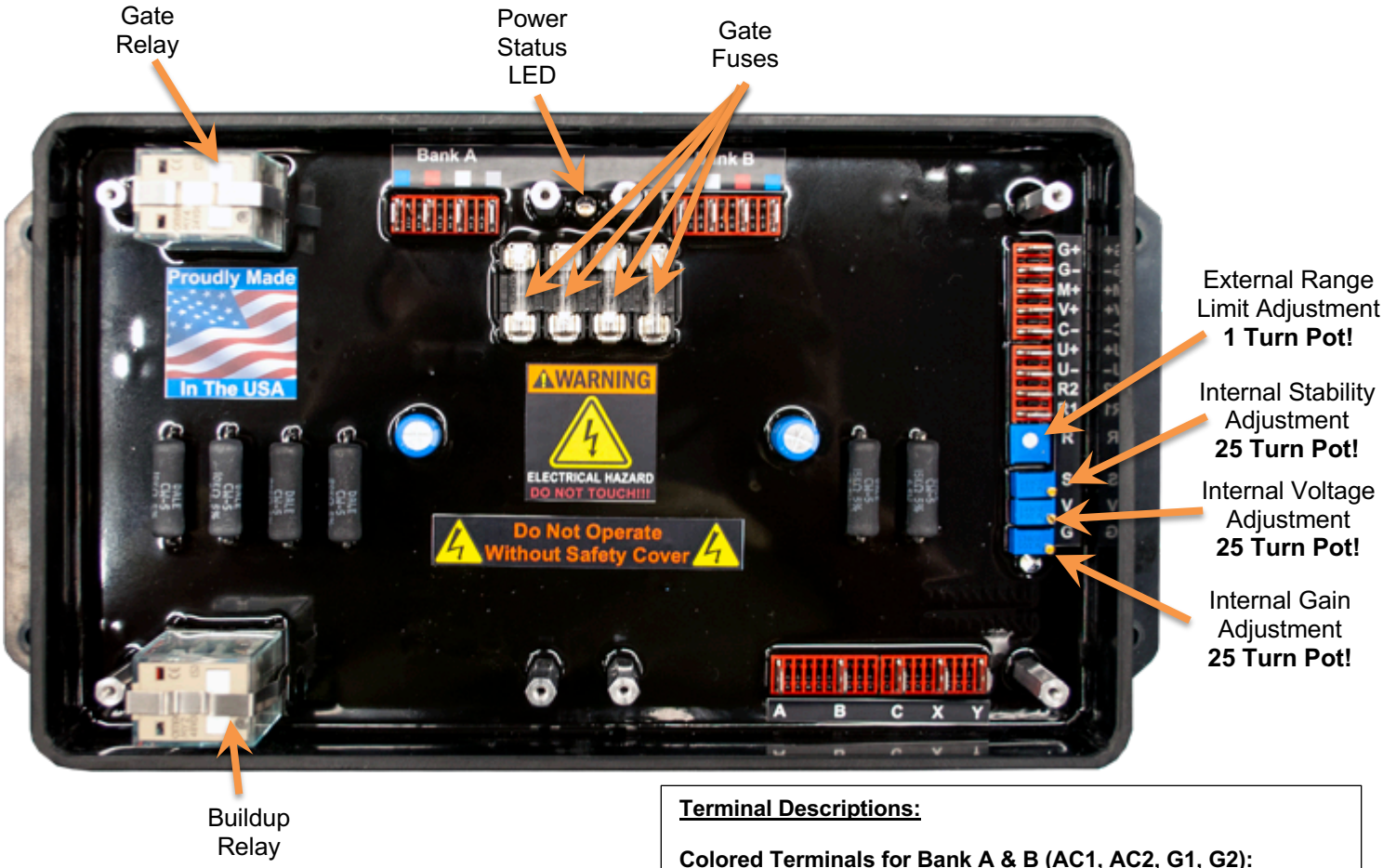

Terminal Descriptions:

Colored Terminals for Bank A & B (AC1, AC2, G1, G2):
Chassis Wiring (Color-Coded, Marked A & B)

A, B, & C:
100-120VAC 3ø Sensing Voltage

X & Y:
Paralleling CT Input

G+ & G-:
Gate Enable Pins
Apply 24VDC to G+ & G- To Run Exciter

R1 & R2:
Remote Adjustment Input

U+ & U-:
Output From Internal 0-10V or 4-20mA Interface Module

V+:
Input for 0-10V Signal

M+:
Input for 4-20mA Signal

C-:
Common terminal for 0-10V and 4-20mA Signals

Standard Control Wiring Diagram

This wiring diagram shows the default control wiring configuration.
Power wiring is shown on Pages 8-9.

This diagram assumes an isolated (unit/islanded) operating environment with manual remote adjustment.

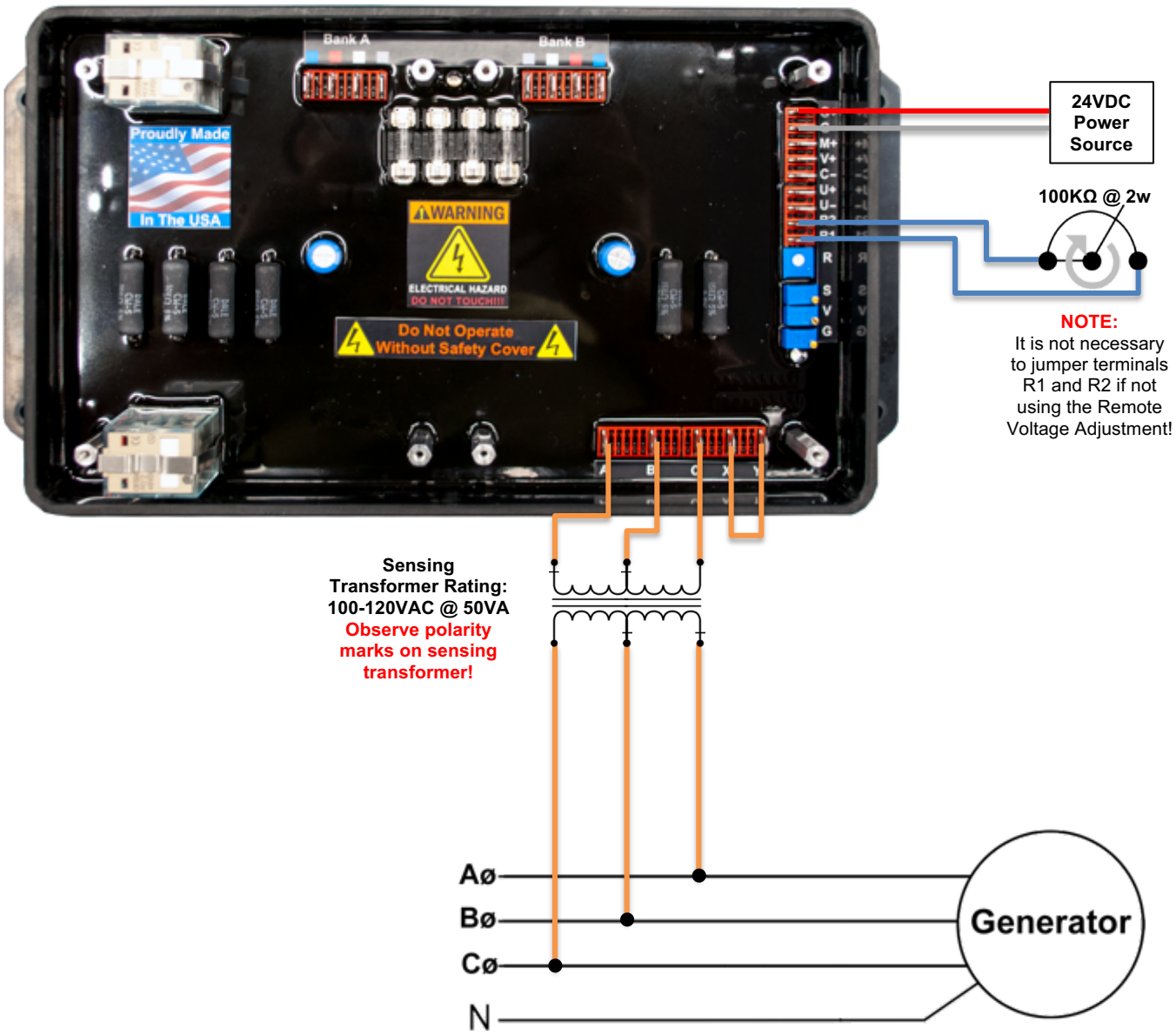

Parallel Control Wiring Diagram

To use the SE12000B Series Static Exciters in a parallel configuration either with another generator or with a buss such as a utility, use the diagram below for proper hookup. **Power wiring is shown on Pages 8-9.**

This diagram assumes a paralleled operating environment with manual remote adjustment.

NOTE: Power-Tronics products parallel using the Reactive Droop compensation method. This allows our products to parallel with existing systems easily while also allowing islanded operation with the flip of a switch. **When initially installing the droop resistor, set it for approximately 2Ω before final adjustment later.** If the droop is excessive when load testing, reduce the resistance a bit at a time until satisfactory droop is achieved. **CT should be sized at 20-30VA capacity!**

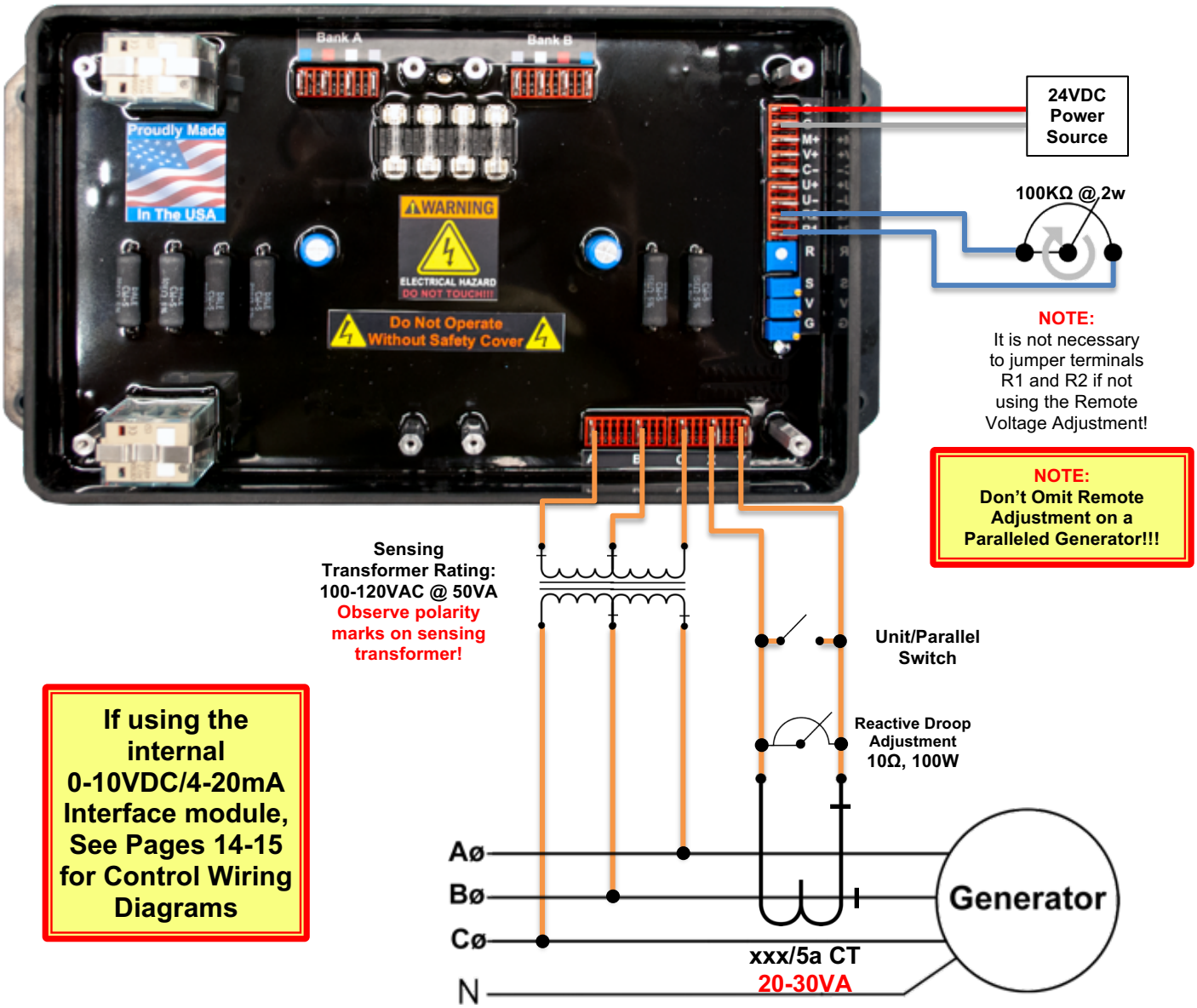

If using the internal 0-10VDC/4-20mA Interface module, See Pages 14-15 for Control Wiring Diagrams

Fully Automatic Remote Adjustment Wiring Diagram

This wiring diagram shows ONLY the control wiring configuration for fully-automatic Remote Control of the Static Exciter using the internal 0-10VDC/4-20mA interface.
Control wiring is shown on Pages 12 and 13.

Automatic / Manual Selectable Remote Adjustment Wiring Diagram

This wiring diagram shows ONLY the control wiring configuration for selectable manual/automatic Remote Control of the Static Exciter using the internal 0-10VDC/4-20mA interface. **Control wiring is shown on Pages 12 and 13.**

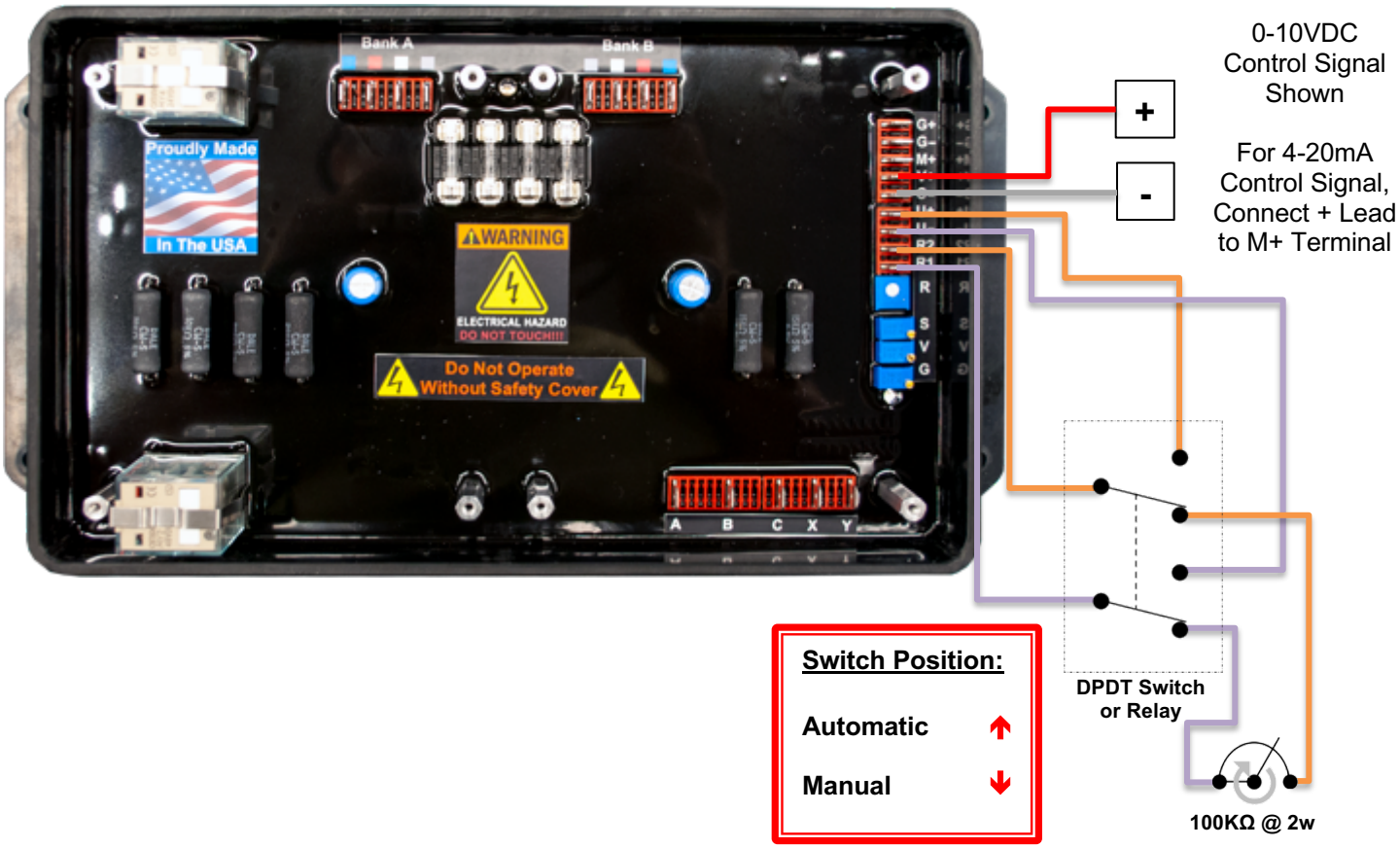

Initial Setup and Commissioning

1. Install the SE12000B Series and wire according to the correct wiring diagram (See Pages 8-15).

2. If installing the SE12000B Series on a brush-type generator, verify that the brushes and brush riggings are isolated, ungrounded, and connected ONLY to the SE12000B Series.

3. The internal voltage control (V) on the VRMSE-1PDF is factory pre-set for 120V 3ø sensing with remote adjustment set to ~50% of its range. We recommend turning the Voltage adjustment potentiometer 3-5 turns CCW on first startup to prevent possible voltage overshoot.

4. If you are using a remote voltage adjustment, set it at 50% of adjustment. If you are using the internal 0-10V/4-20mA interface module, set your external controller to approximately 50% of its output range (6V or 12mA).

5. If the generator is to be paralleled, set the droop resistor to roughly 2Ω.

6. Start up the prime mover and bring up to operating speed, then apply 24vdc to terminals G+ and G- on the VRMSE-1PDF control module.

7. If your model requires an external flashing source, apply the external flashing source to the exciter field to build the generator up. As soon as the generator begins to build voltage, remove the flashing source and the VRMSE-1PDF control module will take over.

8. Set the internal voltage adjustment (V) on the voltage regulator to the desired voltage setting for the generator output by turning the adjustment screw clockwise (right).
   Note that the voltage adjustment is a 25-turn pot! *If using the internal 0-10V/4-20mA Interface Module, verify that your external control can adjust the generator voltage by varying the controller output signal.*

9. Place the generator on line and observe the frequency and voltage.

10. If terminal voltage is hunting or pulsating after adjustment, adjust the internal Stability control (S). Turning the screw clockwise will increase stability. **Note that the terminal voltage will rise as the screw is turned, keep terminal voltage in-range with the internal voltage adjustment!**

11. If the generator is being paralleled, measure the droop during loading and adjust the droop resistor as necessary. Reducing droop resistor resistance will reduce droop.
    NOTE: Loading the generator with a purely resistive load-bank may cause undesirable droop characteristics such as no droop, very slight droop, or even rising terminal voltage. Measure droop with a mixed load for best results.

12. If paralleling and the terminal voltage rises or excessive amperage exportation occurs during loading with a mixed load connected, reverse the CT leads or reverse the wires connected to X and Y and try again.

13. If voltage droop is excessive after droop resistor adjustment, or instability is noted during load transitions, the Gain adjustment (G) may be turned to manipulate the regulation of the AVR. CW will increase gain and make the AVR more sensitive/aggressive, CCW will decrease gain and make the AVR more passive. **Terminal voltage may move with adjustment of this potentiometer. Contact Power-Tronics for assistance when manipulating this adjustment.**

14. If using a remote adjustment scheme, test the range and reaction of the AVR to your control input signal. If the AVR is too aggressive, or if the range is excessive, turn the (R) potentiometer CCW to restrict the remote adjustment range.

15. Observe voltage regulation during no-load and full-load conditions. Once the voltage is set, proper control is observed, and regulating characteristics are satisfactory the installation procedure is complete.

Optional Power-Tronics Add-On Modules

Power-Tronics offers an array of optional add-on modules for the SE12000B Static Exciter. For more information on any of the modules below, visit our online catalog at:

www.power-tronics.com

HVD2

High Voltage Disconnect

Saves your generator and connected equipment from runaway voltage conditions! Disconnects power to the voltage regulator instantly in the event of high voltage!

MOP1224HD

Motorized Potentiometer

Allows the SE12000B to be externally controlled by older automated controllers using pulsed signals or dry contacts for control!

Application Troubleshooting

Problem:	Possible Cause
No Voltage	1 3 5 7 9 11 13 15 20 21
Pulsating Voltage	4 5 6 12 16
Flickering Voltage	4 6 7 14 21 22
High Voltage	6 7 8 9 12 13 17 18 20 21 22
Voltage Drop on Load	5 8 10 12 16 23 24
Low Voltage	5 8 12 13
Poor Voltage Regulation	2 4 10 12 13 16 23 24
No Voltage Control	13 19 20 21 22 23 24

Possible Causes:

1. Residual input voltage to the exciter is below 3.5vac or fuses are open on the chassis or the regulator.
2. Unbalanced generator load.
3. Open exciter field or defective generator.
4. Non linear load or defective connection in exciter field.
5. Open diode in exciter or shorted rotor in generator.
6. Loose component in voltage regulator.
7. Loose wiring connections.
8. Input voltage to regulator is too low.
9. Exciter field is grounded.
10. Non linear load or wrong selection for regulator hookup.
11. Exciter fields are reversed.
12. Wrong selection of regulator wiring configuration.
13. Defective voltage regulator.
14. SCR or Inverter drive effecting generator waveform.
15. Regulator needs external flashing circuit.
16. Isolation transformer is too small.
17. Isolation transformer is needed.
18. Exciter fields are not isolated from other circuits.
19. Input and field circuit are being fed by a common cable or conduit.
20. Incorrect hookup or wiring.
21. Poor brush contact to commutator or sliprings.
22. Damaged, pitted, or grooved slip ring surface.
23. Current transformer has reversed polarity or is not shorted during non parallel operation.
24. Input to regulator is from an auxiliary winding and not the generator main stator.

Bench Check Procedures

1. Wire the 12000B Series as shown in the figure below.

2. Connect two 120 volt 50 to 150 watt light bulbs in series to the F+ and F- Terminals.

3. Install a switched 24vdc power source to terminals G+ and G- on the VRMSE-1PDF Control Module.

4. Turn the internal voltage adjustment on the VRMSE-1PDF Control Module fully Counter-Clockwise (Left) before beginning the testing procedures below.

5. Input 120-139VAC, 3ø fused at no more than 5A into the 12000B Series and input 120VAC 3ø into terminals A, B, and C and install a temporary jumper on terminals X and Y on the VRMSE-1PDF Control Module. **The test lights should be OFF**.

6. Turn on the 24vdc power source to terminals G+ and G- on the VRMSE-1PDF Control Module. **The test lights should be OFF**.

7. Slowly turn the internal voltage adjustment on the VRMSE-1PDF Control Module (Right) until the lights glow. **The test light should light to *HALF* Brightness.** ***NOTE: It may take several turns of the adjustment screw before the lights illuminate!***

8. Slowly turn the internal voltage adjustment of the VRMSE-1PDF Control Module Counter-Clockwise (Left) until the lights go dark. **The test lights should be OFF**. ***NOTE: It may take several turns of the adjustment screw before the lights go dark!***

9. Turn off power and disconnect the 12000B Series from your power sources. Inspect all electronic components on the 12000B Series to ensure they are isolated from touching any part of the housing or chassis.

10. **If you were able to successfully perform all of these tests, the 12000B Series is good.**

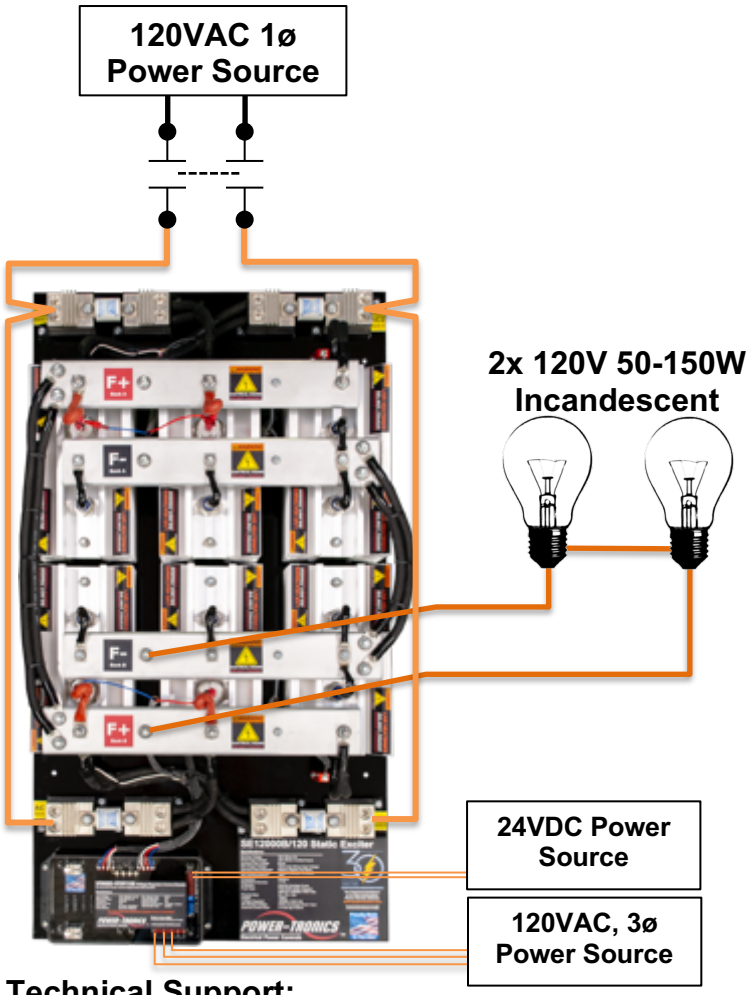

Fuse Replacement Information:

SE12000B Series:
- **Rating: 600A @ 250VAC**
- **Qty: 4**
- **PTI Part #** 5CF-399
- **Cooper–Bussman Part #** FWX-600A

VRMSE-1PDF Control Module:
- **Rating: 5A @ 250VAC**
- **Qty: 4**
- **PTI Part #** 5R3-626
- **Bussman Part #** GDB-5A

Installation Warranty Form

It is very important that you fill out this form completely when installing a voltage regulator. This form serves as a history record on the application. This form also contains the information needed by Power-Tronics, Inc., for repair and troubleshooting of any product you may be having problems with.

Failure to fill out this form during installation will result in a cancellation of your warranty coverage! Filling out this form takes only minutes but will save hours or days later on if your product should require service!

Product Model:	Additional Module(s) or Options:
Serial #:	
Date of Installation:	
This Section for Brushless Generators Only	
Exciter Field Voltage:	Exciter Field Resistance:
This Section for Brush-Type Generators Only	
Shunt-Field Voltage:	Shunt-Field Resistance:
Rotor Resistance @ Brush Leads:	Rotor Resistance on Slip-Rings:
Rotor Excitation Voltage:	
Generator Wiring/Usage Information	
Generator Leads (Check One:) ☐12 ☐10 ☐6 ☐4 (3ø) ☐4 (1ø) ☐3	
Generator Wiring Mode (Check One:) ☐High-Wye ☐Low-Wye ☐Series Delta ☐Zig-Zag ☐Double-Delta ☐Single-Phase ☐Other	
Terminal Voltage:	Residual AC Voltage:
Rated KW:	Rated KVA:
Primary Load (Please Explain):	
Repair/Warranty Request Information	
Company Name:	
Contact Person:	
Telephone Number:	
Email Address:	
Ship-To Address (City, State, Zip, Country):	
Problem Description/History (Please be detailed!!!):	

PRODUCT WARRANTY

Power-Tronics, Inc., assumes no liability for damages due to incorrect voltage or other voltage related damages resulting from either output of the generator or input to the generator exciter system. These problems should be protected with external devices provided by the customer such as ***fuses, surge suppressors, over/under voltage and frequency controls.***

Power-Tronics, Inc., warranties **only parts and workmanship** of this product for a **period of 3 years from the original date of purchase from Power-Tronics, Inc.** Under warranty, Power-Tronics, Inc. will replace, exchange or repair the defective product **without labor or parts cost to the customer.** Remaining warranty of the original product will be transferred to the replaced or repaired product. To obtain warranty, a copy of the original Installation Warranty Form must be sent in with the defective product, which clearly shows the purchase date and serial number of the defective part. A repair request form must be sent in with the product before repairs will begin. You can obtain this form by contacting Power-Tronics, Inc.

Send repairs to: Power-Tronics, Inc., 2802 Cobbler Ln., Kerrville Texas USA 78028.

Send in repairs only by UPS or FedEx. **USPS will NOT deliver to our facility!**

Any *one* of the following conditions will void the warranty:

- Overheating of the power supply resistor on the printed circuit card.
- Overheating of the SCR or freewheeling diode.
- Physical damage to the printed circuit card, housing or components.
- Unauthorized repair or alteration of printed circuit card.
- Installation by anyone other than a qualified professional generator service technician.
- Conductive or corrosive contamination of the circuit card.
- Removal of our company identification from the product.
- Removal of any conformal coating of the printed circuit card or components.
- Overheating of foil on the printed circuit card.
- Inappropriate or infeasible application.
- Use with any external device other than manufactured by Power-Tronics, Inc.
- Failure to fill out the attached warranty card during installation

No other warranty is expressed or implied.